## OEM Replacement Thermocouples (Type J)

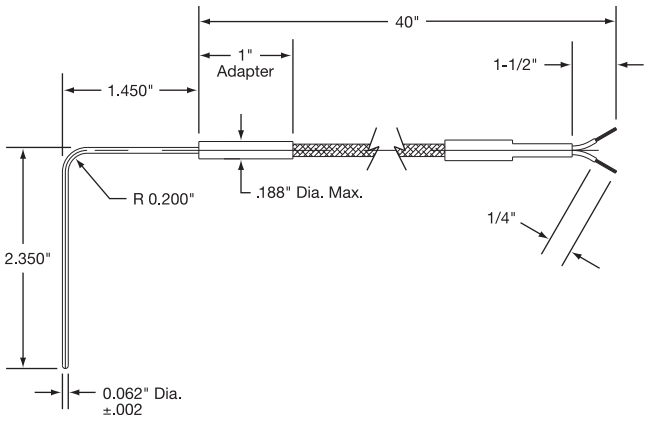


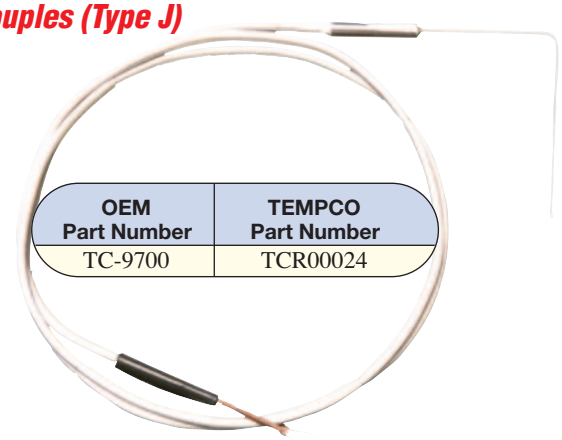

| OEM Part Number | TEMPCO Part Number |
|---|---|
| TC-9700 | TCR00024 |

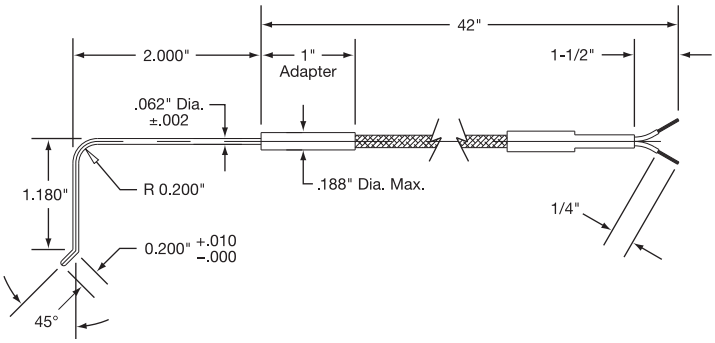


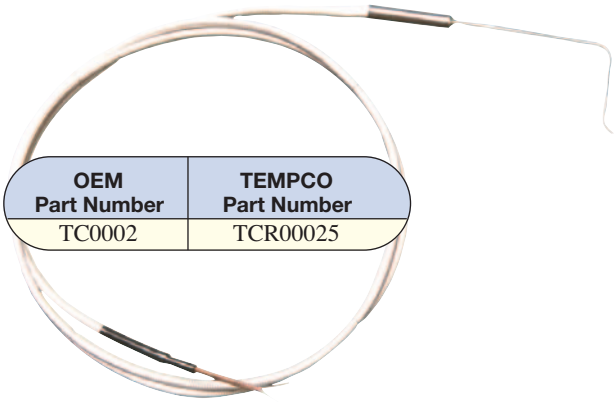

| OEM Part Number | TEMPCO Part Number |
|---|---|
| TC0002 | TCR00025 |

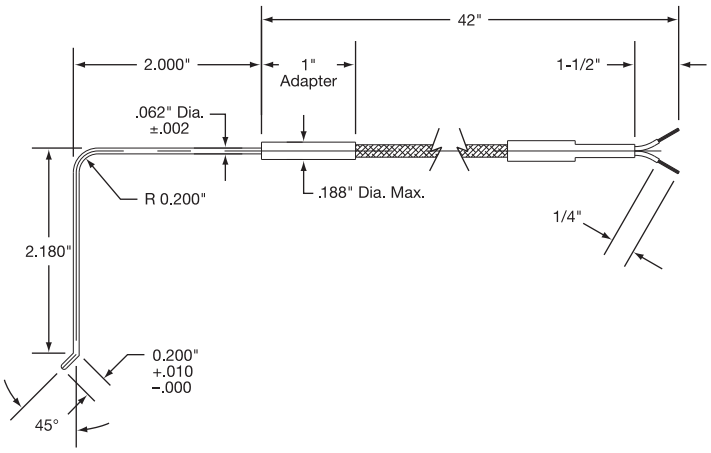


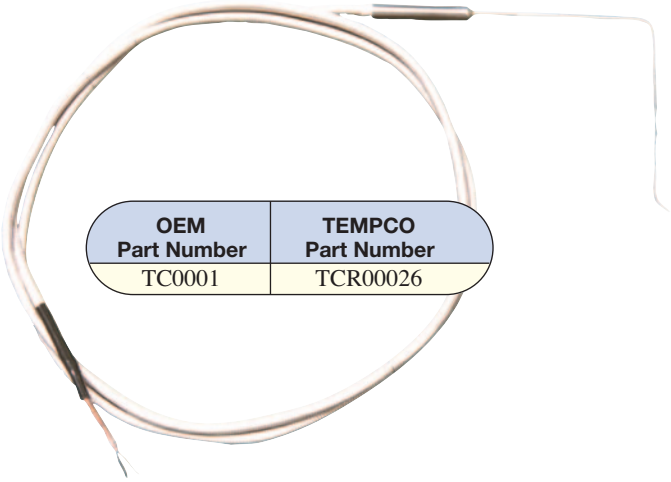

| OEM Part Number | TEMPCO Part Number |
|---|---|
| TC0001 | TCR00026 |

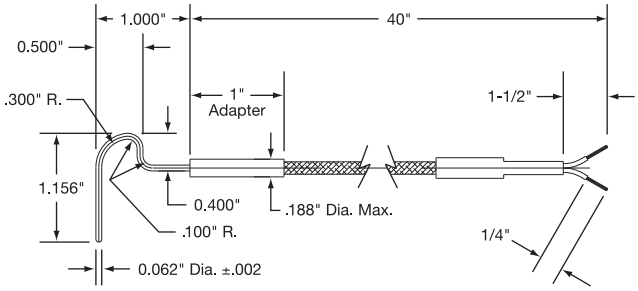


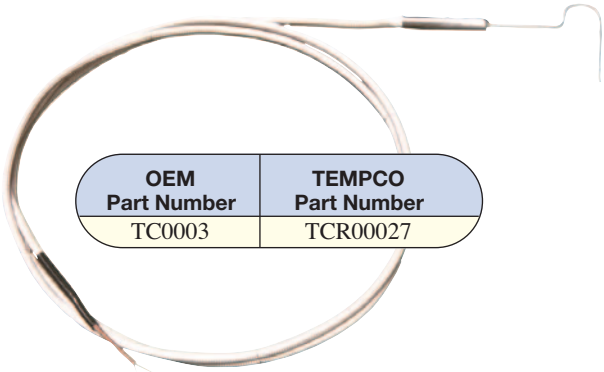

| OEM Part Number | TEMPCO Part Number |
|---|---|
| TC0003 | TCR00027 |

*All Items Available from Stock*